WHEN SKUNKS BECOME A PROBLEM

The Island History

Once highly valued for their pelts, skunks were introduced into Prince Edward Island by fur farmers sometime around 1915 and multiplied and established themselves in the wild throughout the Island. In 1932, a bounty of fifty cents was offered in hopes of controlling vermin. In 1942 it was raised to one dollar and increased again in 1943, but despite payments for up to 9,700 skunks per year, the animal was not eradicated and in fact survived at healthy population levels. Skunks declined sharply in 1970 and again in 1981 when several cases of distemper were positively diagnosed.

A Bit of Biology

Skunks have become accustomed to humans, thriving in semi-open agricultural areas, mixed woods, meadows and even urban areas.

In the fall, skunks feed voraciously, building up fat reserves for winter dormancy. With the onset of cold weather, skunks seek out dens, becoming inactive for the winter. Areas that provide dark secure hiding places such as under barns, utility sheds and porches are common denning sites. They may appear for short periods in winter during prolonged mild spells. Mating occurs in late February and early March when males become active, leaving their dens in search of females.

After a gestation period of 62 days, females produce five kits on average with the young being born in late April or May. Within a month, the females and young can be seen actively foraging for food. Skunks are omnivorous, eating both animal and plant material, with insect larvae forming a large part of their diet.

The Great Horned Owl is their main natural predator but coyotes, foxes and dogs can take the occasional skunk. Vehicles and disease are other causes of mortality. In Prince Edward Island, skunk numbers are periodically reduced with outbreaks of distemper.

Skunks in the Urban Environment

Skunks readily adapt to the urban environment and their offensive odour and habit of digging holes in lawns in search of insect larvae, make it an unwelcome urban resident.

Irrespective of chance encounters by family pets, the skunk can be beneficial to homeowners when foraging for June bug larvae. June bug larvae feed on grass roots resulting in damage to the lawn and in cases of severe infestation can kill large areas of grass.

Traps and Trapping

Traps suitable for live-trapping skunks can be rented, purchased, or constructed. Local rental agencies have a number of traps available at a reasonable fee or they may be purchased from a hardware store. On the other hand, a suitable trap is easily constructed from scrap material using the plan illustrated.

SKUNK LIVE-TRAP

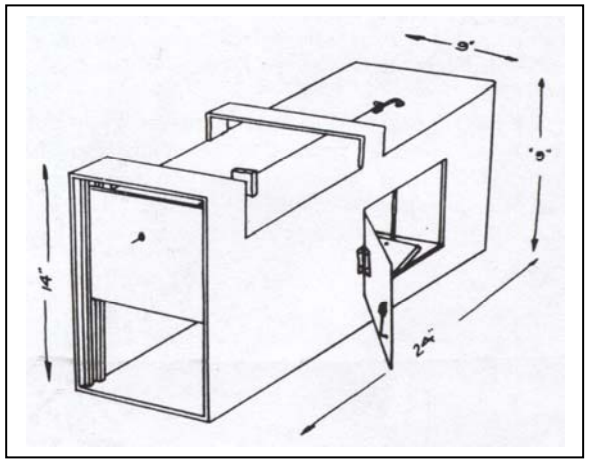

Nuisance animal control operators can trap problem animals for a prescribed fee. There are a number of licensed individuals who are prepared to assist anyone with a skunk

problem. Their names can be obtained from the Forests, Fish and Wildlife Division office (902 368-4683).

Minimizing Skunk Problems

June bugs mate in May and June and are attracted to yard and window lights. The use of amber coloured lights and the drawing of window blinds in the evening will lessen the attraction of June bugs to a property. Fewer June bugs will result in fewer larvae. As well, you can treat the lawn with insecticides to reduce the incidence of larvae. Insecticides are available from farm and garden supply stores.

Garbage left out-of-doors in unsecured containers is not only a source of food to local cats and dogs, but to skunks as well. Garbage should be confined in a secure container indoors.

Utility buildings and porches that have no secure foundation are open invitations to skunks as denning areas. Concrete foundations or wire screening extending into the ground will make these areas inaccessible to skunks.

Skunk Removal

Skunks can be trapped at entrances of known denning sites, or trapped about their feeding areas. A wooden box trap with a wire mesh end is ideal. Leg hold traps or any kill device such as a conibear trap should be avoided. Skunks caught in box traps can be safely moved if caution is taken to avoid shaking the trap. Wire mesh traps must be carefully covered with a cloth material before moving.

Skunks caught in box traps can be released or disposed of by chloroforming while still in the trap. To release an animal, the door is opened permitting the animal to leave on its own, unmolested. It is advisable to stand upwind when releasing an animal.

To dispose of an animal by using chloroform, place the trap in a plastic bag, pour chloroform on a piece of paper towel and place on the trap, then close the bag tightly and leave for an hour.

Sick or Diseased Animals

Any sick or diseased skunk should be reported to the Forests, Fish and Wildlife Division. Sick and diseased animals will be forwarded to the Atlantic Veterinary College for analysis. Individuals will in turn be notified of the College's findings.

The following recipe was developed to neutralize the odour-causing compound in skunk spray.

SKUNK DEODORANT RECIPE

(From the Pennsylvania Game Commission Instructor's Newsletter)

1 Quart of 3% Hydrogen Peroxide
¼ Cup of Baking Soda (Sodium Bicarbonate)
1 Tsp. Liquid Soap (Dish Detergent)

Mix the above together in a plastic bucket and wash the infected object, be it human, canine, feline, garage, shed, car basement, etc. Make sure you keep the solution away from eyes, nose and mouth. **The skunk odour should disappear immediately!** This product is fast and safe – and best of all, it works!

Recipe courtesy of Paul Krebaum, Chemist from Midwestern U.S.A.

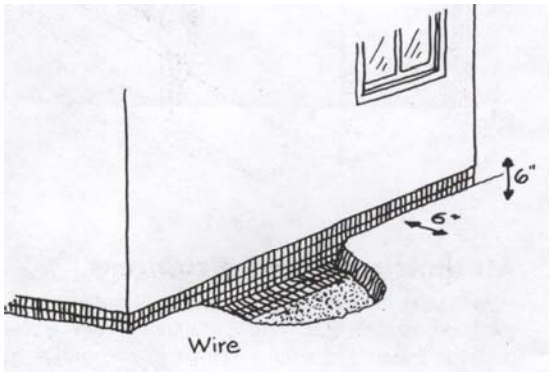

PROTECTING OUT-BUILDING WITH WIRE SCREENING

For more information on striped skunks or other wildlife topics please contact:

Forests, Fish and Wildlife Division,
Department of Environment, Energy & Forestry,
P.O. Box 2000, Charlottetown,
Prince Edward Island
C1A 7N8

Tel: 902 368-4683
Fax: 902 368-5830
http://www.gov.pe.ca/

Prince Edward Island
Environment, Energy and Forestry